No ROHS hazardous material

Ordinal	Modify content description	Cartographer	Date of change
1			
2			

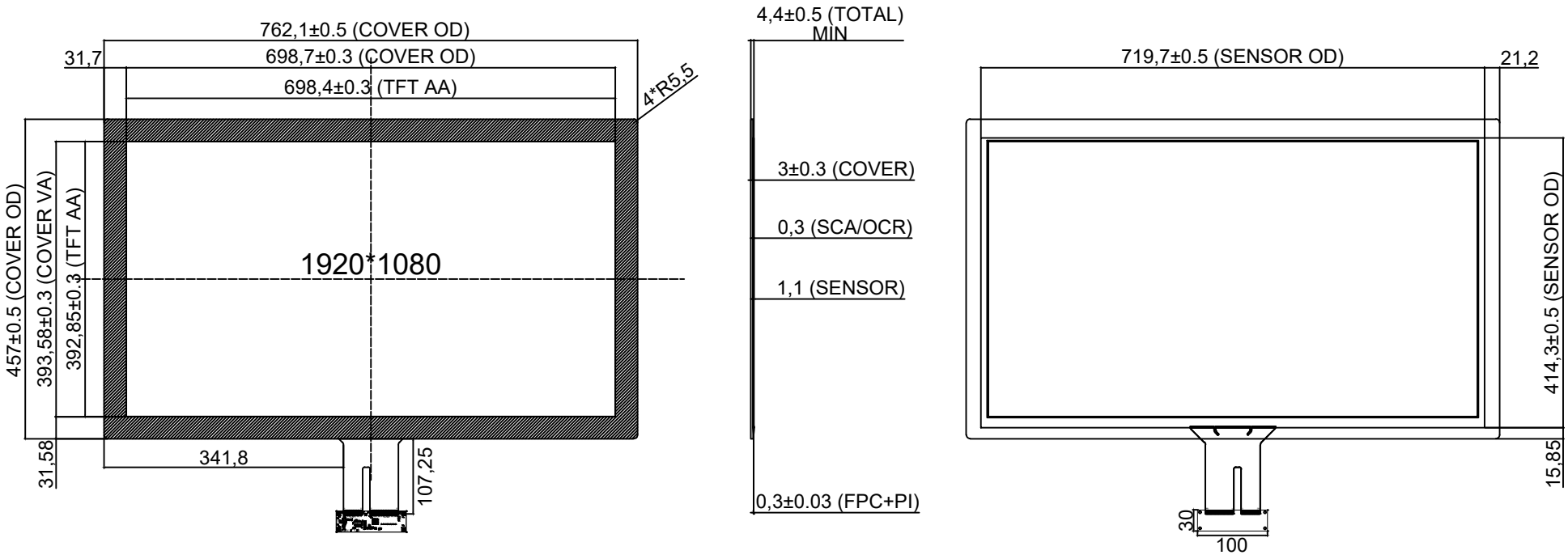

Cover printing area: Print Black

Front view

Side view

Back view

Technical parameters			
1. Interfaces:	USB	7. Humidity range:	45～85%RH
2. Structure :	G+G	8. Transmittance:	≥85%
3. IC Solutions:	ILI2312	9. Surface hardness:	≥6H
4. Impact Resistance:	30.0ΦDIA.Steel Ball /132g/Height=35cm/1time	10. Operate :	-20℃～+70℃, ≤85%RH
5. Touch points:	10 points	11. Storage :	-30℃～+80℃, ≤85%RH
6. Power supply:	5V	12. Unmarked dimension tolerance as±0.5	

USB Connector(J1)	
1	VCC(5V)
2	DN
3	DP
4	GND

杭州宏枭科技有限公司
GraHowlet Technology CO.,Ltd

Model	HX3201807			View Direction		Unit	MM
Version	V1.0	Designer	LUO	Date	2021-01-13	Edition	A1
Customer		Approved		Date		Proportion	1:1